PSCBATH

SOLIDLECTUS PS IDV 282447

SOLID SURFACE ELONGATED BATHTUB

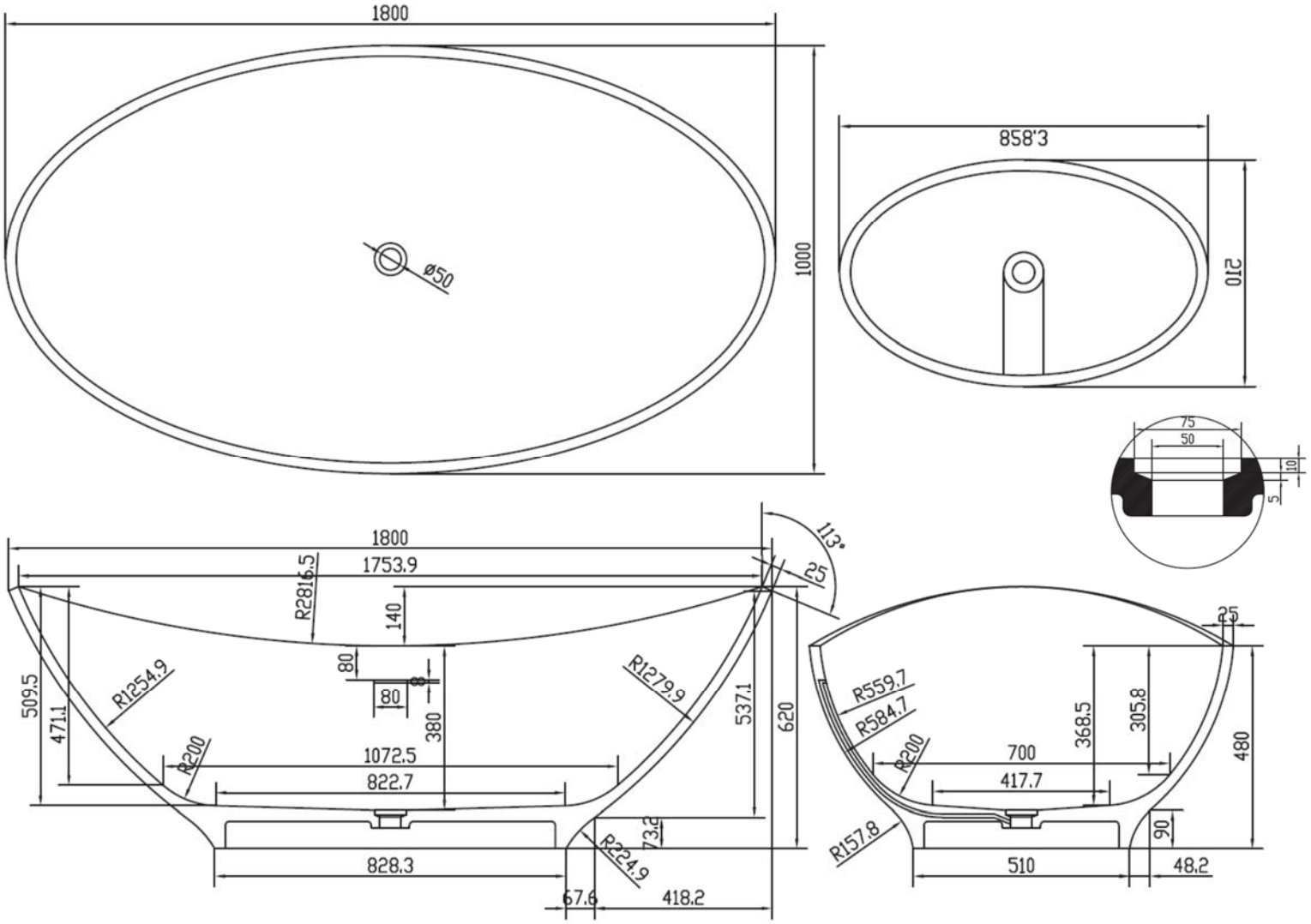

SOLIDLECTUS MATTE WHITE PS IDV 282447
71” x 39” x 24” - 1'' EDGE
NET WEIGHT 375 LBS - WATER CAPACITY 82 G.
OVER FLOW HOLE / MATTE WHITE TRIM ON POP-UP /
P-TRAP & DRAIN INCLUDED.
ADJUSTABLE FEET.

Project Information
Job Name:_____ Date:_____ Type of hardware:_____

Comments:_____

Approved:_____